Technical Data
Data Sheet N3154 Rev. -

RoHS HF

# MBRFA20150CT SCHOTTKY RECTIFIER

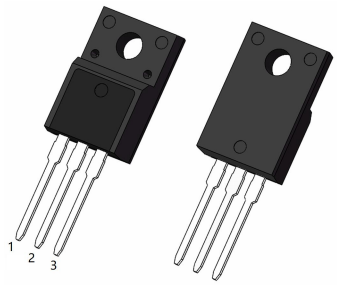


TO-220FP

## Features

- 175°C $T_J$ operation
- Center tap configuration
- Low forward voltage drop
- High purity, high temperature epoxy encapsulation for enhanced mechanical strength and moisture resistance
- High frequency operation
- Guard ring for enhanced ruggedness and long term Reliability
- Terminals finish: Tin Lead-free plated
- This is a Halogen Free Device
- All SMC parts are traceable to the wafer lot
- Additional testing can be offered upon request

## Circuit Diagram

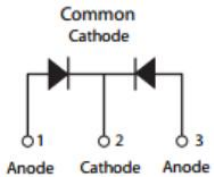


## Applications

- Switching power supply
- Converters
- Free-Wheeling diodes
- Reverse battery protection

## Maximum Ratings:

| Characteristics | Symbol | Condition | Max. | Units |
|---|---|---|---|---|
| Peak Repetitive Reverse Voltage<br>Working Peak Reverse Voltage<br>DC Blocking Voltage | $V_{RRM}$<br>$V_{RWM}$<br>$V_R$ | - | 150 | V |
| Average Rectified Forward Current | $I_{F(AV)}$ | Tc=144°C, in DC | 10(Per Leg)<br>20(Per Device) | A |
| Peak One Cycle Non-Repetitive Surge Current(Per Leg) | $I_{FSM}$ | 8.3ms, Half Sine pulse,$T_A$=25°C, | 150 | A |

## Electrical Characteristics:

| Characteristics | Symbol | Condition | Typ. | Max. | Units |
|---|---|---|---|---|---|
| Forward Voltage Drop(Per Leg)* | $V_{F1}$ | @ 10A, Pulse, $T_J$ = 25 °C | 0.84 | 0.90 | V |
| | $V_{F2}$ | @ 10A, Pulse, $T_J$ = 125 °C | 0.75 | 0.80 | V |
| Reverse Current(Per Leg)* | $I_{R1}$ | @$V_R$ = rated $V_R$, $T_J$ = 25 °C | 0.001 | 1.0 | mA |
| | $I_{R2}$ | @$V_R$ = rated $V_R$, $T_J$ = 125 °C | 0.08 | 6.0 | mA |
| Junction Capacitance(Per Leg) | $C_T$ | @$V_R$ = 5V, $T_C$ = 25 °C, $f_{SIG}$ = 1MHz | 150 | 400 | pF |
| Series Inductance(Per Leg) | $L_S$ | Measured lead to lead 5 mm from package body | 8.0 | - | nH |
| Voltage Rate of Change | dv/dt | - | - | 10,000 | V/μs |
| RSM Isolation Voltage (t = 1.0 second, R. H. < =30%, $T_A$ = 25 °C) | $V_{ISO}$ | Clip mounting, the epoxy body away from the heatsink edge by more than 0.110" along the lead direction. | - | 4500 | V |
| | | Clip mounting, the epoxy body is inside the heatsink. | - | 3500 | |
| | | Screw mounting, the epoxy body is inside the heatsink. | - | 1500 | |

* Pulse width < 300 μs, duty cycle < 2%

## Thermal-Mechanical Specifications:

| Characteristics | Symbol | Condition | Specification | Units |
|---|---|---|---|---|
| Junction Temperature | $T_J$ | - | -55 to +175 | ˚C |
| Storage Temperature | $T_{stg}$ | - | -55 to +175 | ˚C |
| Typical Thermal Resistance Junction to Case(Per Leg) | $R_{\theta JC}$ | DC operation | 3.5 | ˚C/W |
| Approximate Weight | wt | - | 2 | g |
| Case Style | TO-220FP | | | |

## Ratings and Characteristics Curves

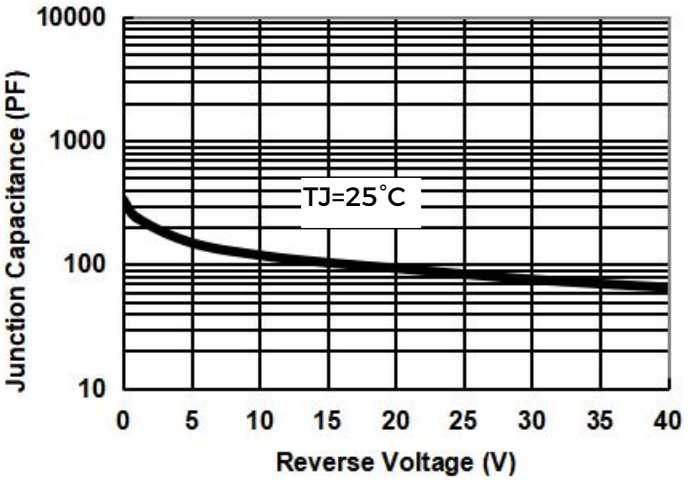


Fig.1-Typical Junction Capacitance

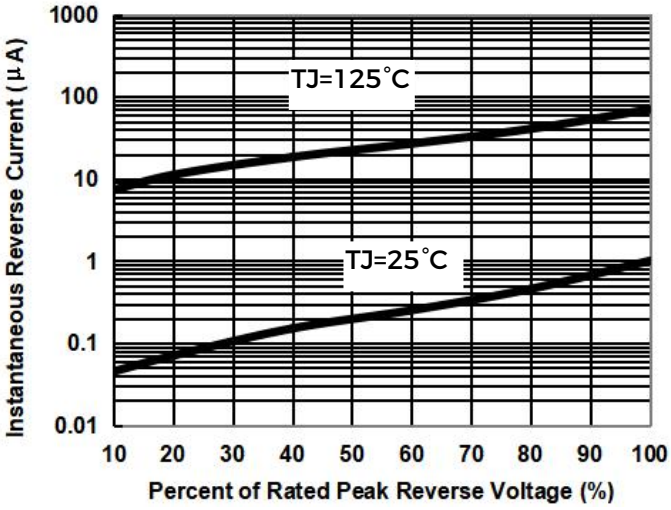


Fig.2-Typical Reverse Characteristics

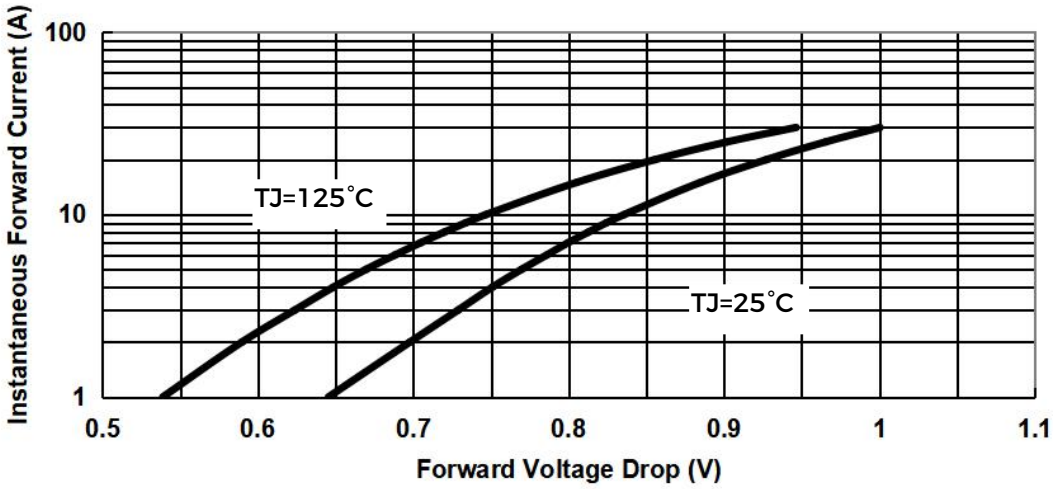


Fig.3-Typical Instantaneous Forward Voltage Characteristics

## Mechanical Dimensions TO-220FP

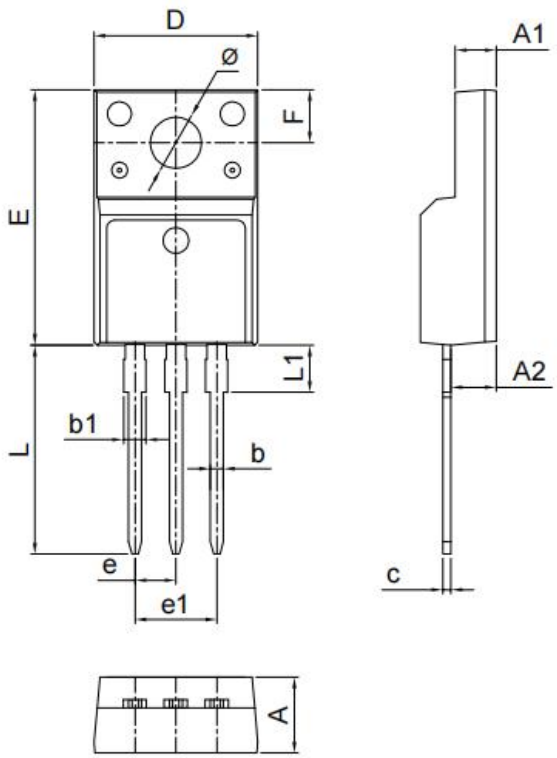


| SYMBOL | Millimeters | | |
|---|---|---|---|
| | MIN. | TYP. | MAX. |
| A | 4.50 | 4.70 | 4.90 |
| A1 | 2.34 | 2.54 | 2.74 |
| A2 | 2.66 | 2.76 | 2.86 |
| b | 0.75 | 0.80 | 0.85 |
| b1 | 1.24 | 1.34 | 1.44 |
| c | 0.40 | 0.50 | 0.60 |
| D | 10.00 | 10.16 | 10.32 |
| E | 15.75 | 15.90 | 16.05 |
| e | 2.44 | 2.54 | 2.64 |
| e1 | 4.88 | 5.08 | 5.26 |
| F | 3.10 | 3.30 | 3.50 |
| L | 12.90 | 13.20 | 13.50 |
| L1 | 2.90 | 3.10 | 3.30 |
| Φ | 3.10 | 3.20 | 3.30 |

## Tube Specification

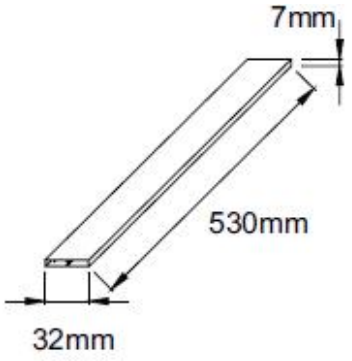


## Marking Diagram

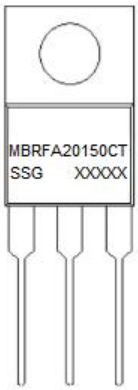


Where XXXXX is YYWWL

| | |
|---|---|
| MBR | = Device Type |
| FA | = Package type |
| 20 | = Forward Current (20A) |
| 150 | = Reverse Voltage (150V) |
| CT | = Configuration |
| SSG | = SSG |
| YY | = Year |
| WW | = Week |
| L | = Lot Number |

**Cautions**: Molding resin
Epoxy resin UL:94V-0

## Ordering Information

| Device | Package | Shipping |
|---|---|---|
| MBRFA20150CT | TO-220FP | 50 pcs/ tube |

Technical Data
Data Sheet N3154 Rev. -

RoHS HF

**DISCLAIMER:**

1- The information given herein, including the specifications and dimensions, is subject to change without prior notice to improve product characteristics. Before ordering, purchasers are advised to contact the SMC Diode Solutions sales department for the latest version of the datasheet(s).

2- In cases where extremely high reliability is required (such as use in nuclear power control, aerospace and aviation, traffic equipment, medical equipment , and safety equipment) , safety should be ensured by using semiconductor devices that feature assured safety or by means of users' fail-safe precautions or other arrangement .

3- In no event shall SMC Diode Solutions be liable for any damages that may result from an accident or any other cause during operation of the user's units according to the datasheet(s). SMC Diode Solution assumes no responsibility for any intellectual property claims or any other problems that may result from applications of information, products or circuits described in the datasheets.

4- In no event shall SMC Diode Solutions be liable for any failure in a semiconductor device or any secondary damage resulting from use at a value exceeding the absolute maximum rating.

5- No license is granted by the datasheet(s) under any patents or other rights of any third party or SMC Diode Solutions.

6- The datasheet(s) may not be reproduced or duplicated, in any form, in whole or part, without the expressed written permission of SMC Diode Solutions.

7- The products (technologies) described in the datasheet(s) are not to be provided to any party whose purpose in their application will hinder maintenance of international peace and safety nor are they to be applied to that purpose by their direct purchasers or any third party. When exporting these products (technologies), the necessary procedures are to be taken in accordance with related laws and regulations..